X-TREND

CUSTOM MADE **IDEAS**

www.x-trend.it

X-TREND

CUSTOM MADE **IDEAS**

DOOR HANDLES

POIGNÉES DE PORTE

INSTALLATION SYSTEMS

MODE D'INSTALLATION

CONNECTION SCREWS SYSTEM
SYSTÈME À VIS DE JONCTION

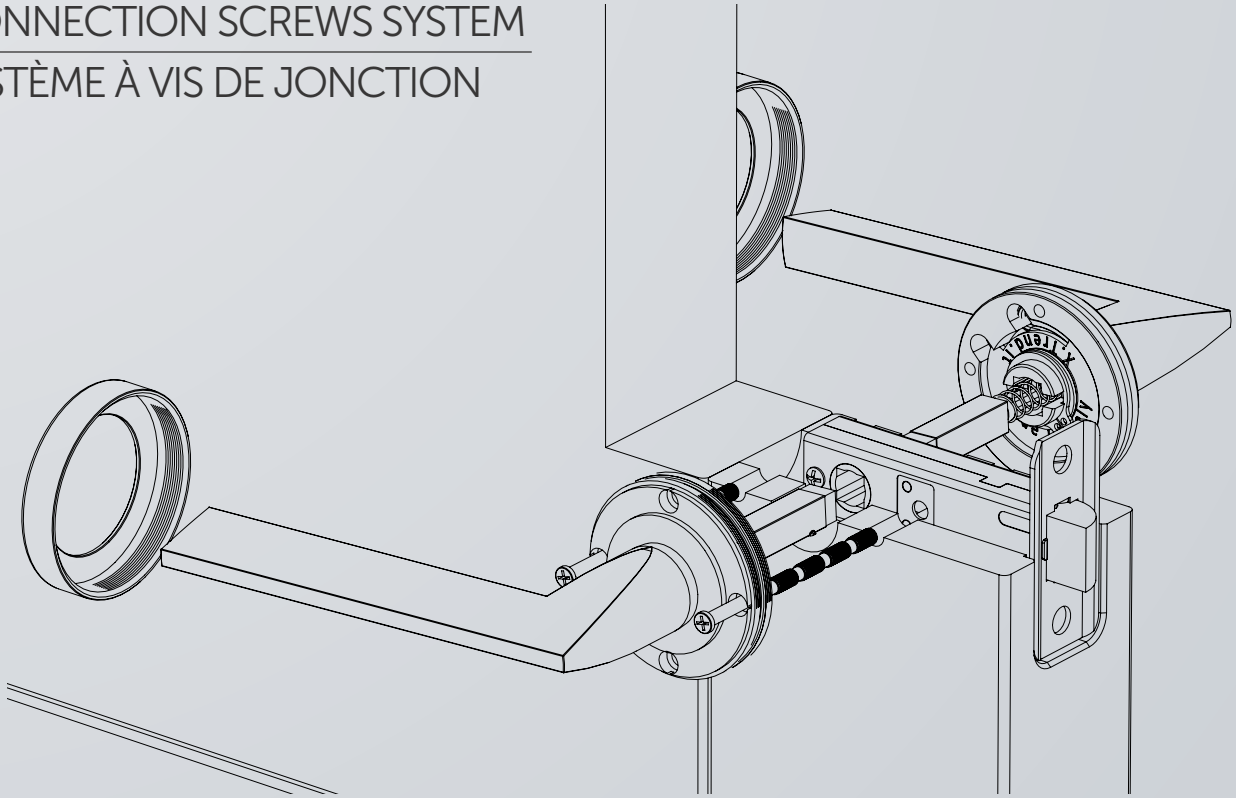

PASSING SPINDLE SYSTEM
SYSTÈME À CARRÉ PASSANT

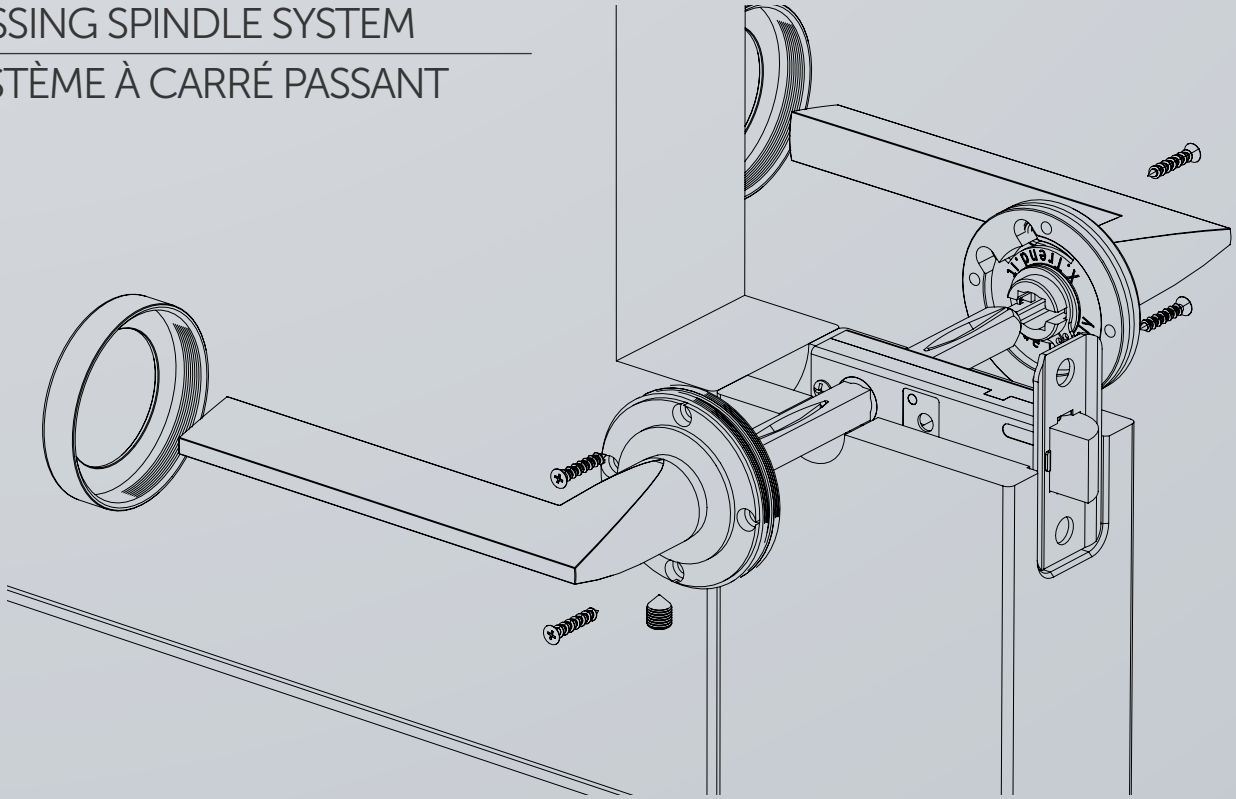

X-TREND
CUSTOM MADE IDEAS

LUMINA

Art. FMAL019200

ACCESSORIES
ACCESSOIRES

NORMAL HOLE
ROSETTE TROU DE CLÉ "L"

OVAL HOLE
ROSETTE TROU DE CYLINDRE OVAL

YALE HOLE
ROSETTE TROU DE CYLINDRE EUROPÉEN "I"

FINISHES
FINITION

BJS BJS03 BJL B5

LUMINA 2

Art. FMAL219200

ACCESSORIES
ACCESSOIRES

NORMAL HOLE
ROSETTE TROU DE CLÉ "L"

OVAL HOLE
ROSETTE TROU DE CYLINDRE OVAL

YALE HOLE
ROSETTE TROU DE CYLINDRE EUROPÉEN "I"

FINISHES
FINITION

BJS BJS03 BJL B5

X-TREND
CUSTOM MADE IDEAS

SCORPION

Art. FMAS019200

VARIANTS
VARIANTES

VERSION WITH NARROW BACKPLATE
VERSIONE PLAQUE ÉTROITE

ACCESSORIES
ACCESSOIRES

NORMAL HOLE
ROSETTE TROU DE CLÉ "L"

OVAL HOLE
ROSETTE TROU DE CYLINDRE OVAL

YALE HOLE
ROSETTE TROU DE CYLINDRE EUROPÉEN "I"

FINISHES
FINITION

BJS BJS03 BJL B5 BL

NEPTUNE

Art. FMA0019200

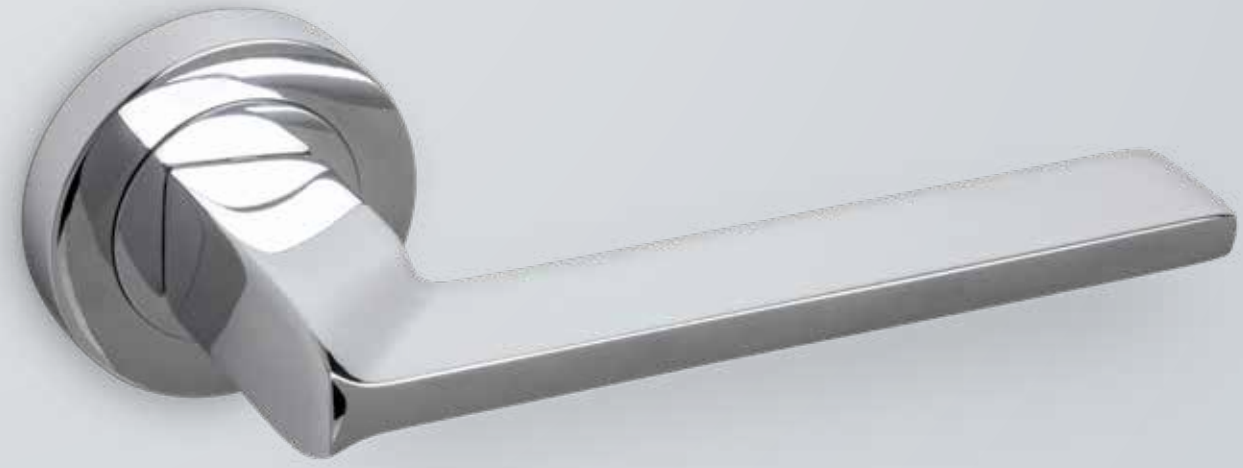

ACCESSORIES
ACCESSOIRES

NORMAL HOLE
ROSETTE TROU DE CLÉ "L"

OVAL HOLE
ROSETTE TROU DE CYLINDRE OVAL

YALE HOLE
ROSETTE TROU DE CYLINDRE EUROPÉEN "I"

FINISHES
FINITION

BJS BJS03 BJL B5 BL

X-TREND
CUSTOM MADE IDEAS

RONDÒ

Art. FMAR019200

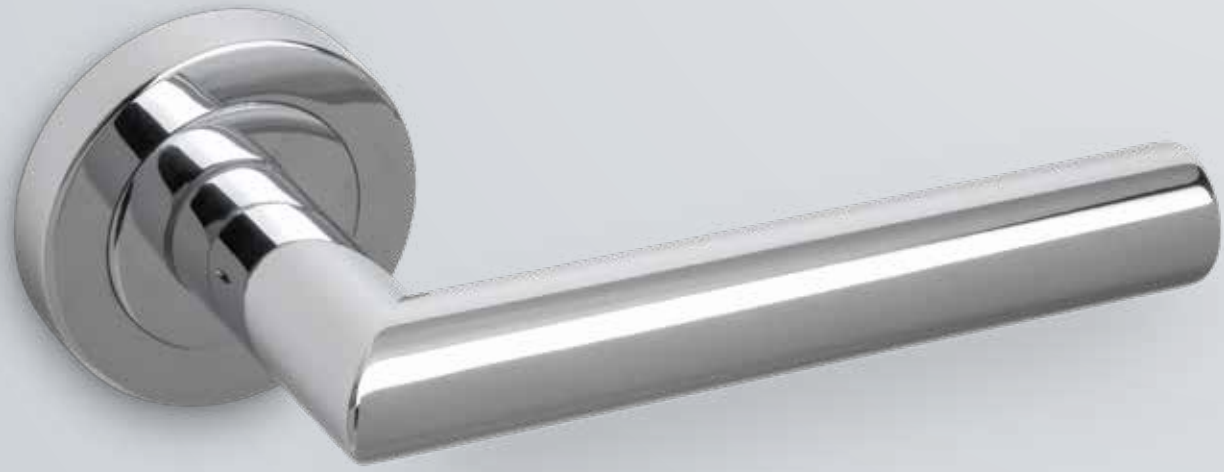

ACCESSORIES
ACCESSOIRES

NORMAL HOLE
ROSETTE TROU DE CLÉ "L"

OVAL HOLE
ROSETTE TROU DE CYLINDRE OVAL

YALE HOLE
ROSETTE TROU DE CYLINDRE EUROPÉEN "I"

FINISHES
FINITION

BJS BJL B5

HORIZON X

Art. FMAH019200

ACCESSORIES
ACCESSOIRES

NORMAL HOLE
ROSETTE TROU DE CLÉ "L"

OVAL HOLE
ROSETTE TROU DE CYLINDRE OVAL

YALE HOLE
ROSETTE TROU DE CYLINDRE EUROPÉEN "I"

FINISHES
FINITION

BJS BJS03 BJL B5

X-TREND
CUSTOM MADE IDEAS

A CLASS

Art. FMAA019200

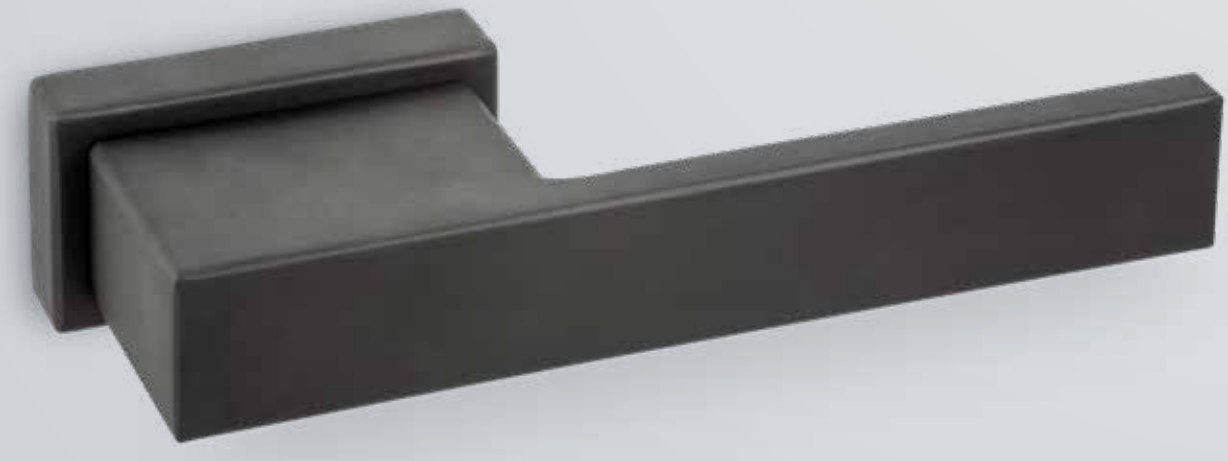

ACCESSORIES
ACCESSOIRES

YALE HOLE
ROSETTE TROU DE CYLINDRE EUROPÉEN "I"

TURN LATCH FOR BATHROOM DOOR
BOUTON DE CONDAMNATION (BEC DE CANE)

EMERGENCY RELEASE
ROSACE DE DÉ-CONDAMNATION (BEC DE CANE)

FINISHES
FINITION

BJS04 BJS03 BJL

BISCOTTO

Art. FMAB019200

ACCESSORIES
ACCESSOIRES

NORMAL HOLE
ROSETTE TROU DE CLÉ "L"

OVAL HOLE
ROSETTE TROU DE CYLINDRE OVAL

YALE HOLE
ROSETTE TROU DE CYLINDRE EUROPÉEN "I"

FINISHES
FINITION

BJS BJS03 BJL B5

X-TREND
CUSTOM MADE IDEAS

ELISSA

Art. FMAE019200

ACCESSORIES
ACCESSOIRES

NORMAL HOLE
ROSETTE TROU DE CLÉ "L"

OVAL HOLE
ROSETTE TROU DE CYLINDRE OVAL

YALE HOLE
ROSETTE TROU DE CYLINDRE EUROPÉEN "I"

FINISHES
FINITION

BJS BJL

X-TREND

CUSTOM MADE **IDEAS**

HANDLES FOR WINDOW

POIGNÉES DE FENÊTRE

X-TREND
CUSTOM MADE IDEAS

SCORPION

Art. FCRS0192DK

FINISHES
FINITION

BJS BJS03 BJL B5 BL

LUMINA

Art. FCRL0192DK

FINISHES
FINITION

BJS BJS03 BJL B5

X-TREND
CUSTOM MADE IDEAS

ACCESSORIES FOR DOORS

ACCESSOIRES POUR PORTES

SQUARE ROSE
ROSACE DE RECOUVREMENT CARRÉ

TURN LATCH FOR BATHROOM DOOR
BOUTON DE CONDAMNATION (BEC DE CANE)

EMERGENCY RELEASE
ROSACE DE DÉCONDAMNATION (BEC DE CANE)

HORIZON X ACCESSORIES

ACCESSOIRES POUR PORTES "HORIZON X"

TURN LATCH FOR BATHROOM DOOR
BOUTON DE CONDAMNATION (BEC DE CANE)

EMERGENCY RELEASE
ROSACE DE DÉCONDAMNATION (BEC DE CANE)

REGULAR FINISHES

FINITION STANDARD

BJS04

PEARL/SATIN CHROME

CHROME SATIN OPAQUE

BJS

SATIN CHROME

CHROME SATIN

BJS03

MATT BLACK CHROME

CHROME NOIR SATIN OPAQUE

BJL

POLISHED CHROME

CHROME POLI

B5

MATT BRONZE

BRONZÉ OPAQUE

BL

POLISHED BRASS

LAITON POLI

PVD technology

SPECIAL FINISHES

FINITIONS SPÉCIALES

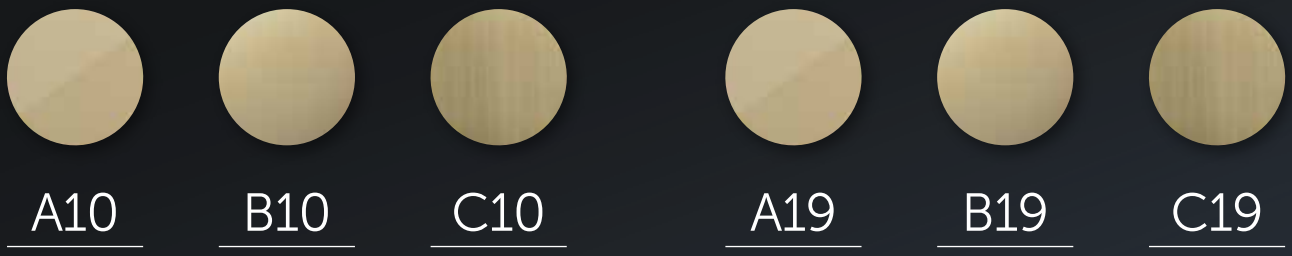

A10 B10 C10 A19 B19 C19

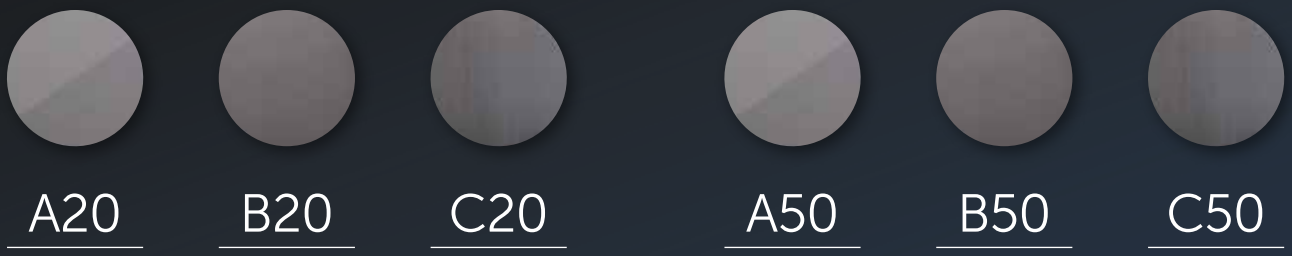

A20 B20 C20 A50 B50 C50

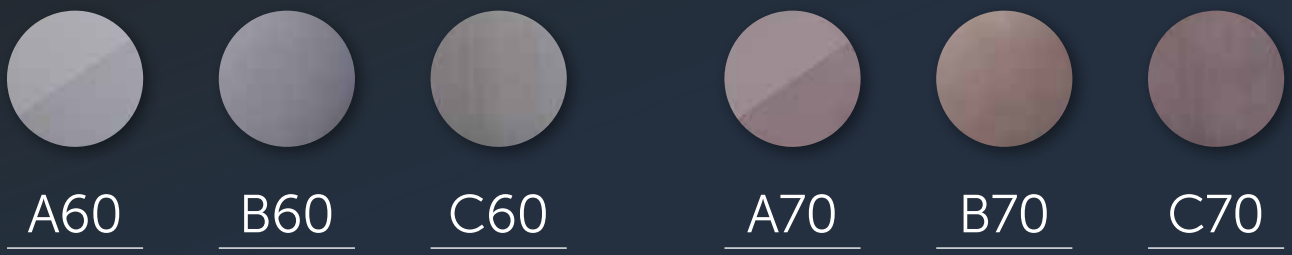

A60 B60 C60 A70 B70 C70

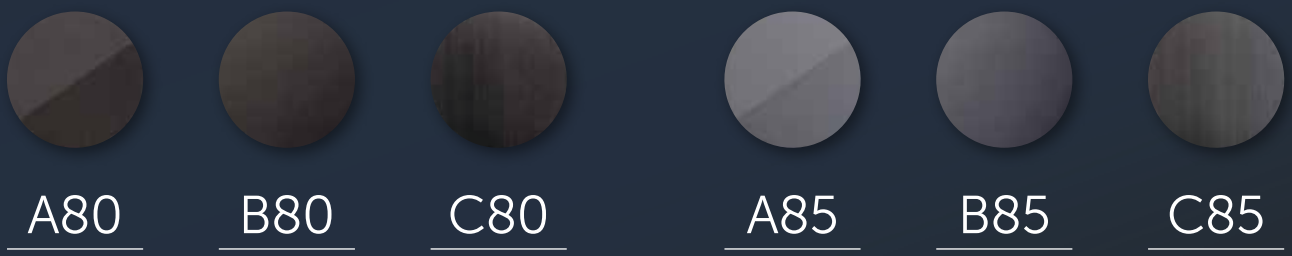

A80 B80 C80 A85 B85 C85

didieffe group
ITALIAN FAMILY COMPANY

Zona Artigianale Pradenich, 2/A
32030 Cesiomaggiore (BL) ITALY
T +39 0439 438244 - **F** +39 0439 438206

info@didieffe.com
www.didieffegroup.com

EVIDENZIA.IT